Single-Element Ultrasonic Force/Displacement Sensor
SE Series Characteristics

Pat. No. 4,964,302 Other US & Foreign Patents Apply

Single Element (SE) Sensor Overview

The SE Series of force/displacement sensors are an inexpensive alternative to strain gauges. If the required absolute accuracy of the force measurement is in the range of 1% to 5%, or the relative accuracy is in the 0.1% range, then sensors from the SE Series can be a cost-effective option. The SE sensors also measure displacement with high accuracy and micro-inch resolution.

Unlike strain gauges and thin plastic film sensors which use resistive ink, all of the SE Series sensors are compliant. Compliance is due to the sensor's small rubber pad which is compressed by the applied force. The amount of compression or displacement of the rubber is accurately measured by an ultrasonic pulse. Pad thickness changes almost linearly for both compressive or tensile forces (i.e., a push or a pull). Different rubbers can be used to obtain different force characteristics (e.g. greater force range or greater force resolution).

A variation of the single-element sensor is Bonneville's FP Family of force-plate sensors. Essentially, force plates consist of four single-element sensors placed at the corners of a rigid plate. Force plates provide information on the displacement of the plate (due to forces), the total force applied to the plate, and the X and Y co-ordinates of the center of force.

Description of Sensor Operation

The Bonneville Scientific Single-Element Force/Displacement Sensor consists of a layer of piezoelectric material, PVDF, covered with a rubber pad, which is capped by reflective material. When the PVDF layer is driven by an electrical pulse, it responds by emitting an ultrasonic wave into the overlying rubber pad (see Figure 1). This wave propagates through the pad at the rubber's inherent speed of sound. When the wave hits the reflector, it is reflected back towards the PVDF. The ultrasonic echo is converted back into an electrical pulse when it encounters the PVDF film.

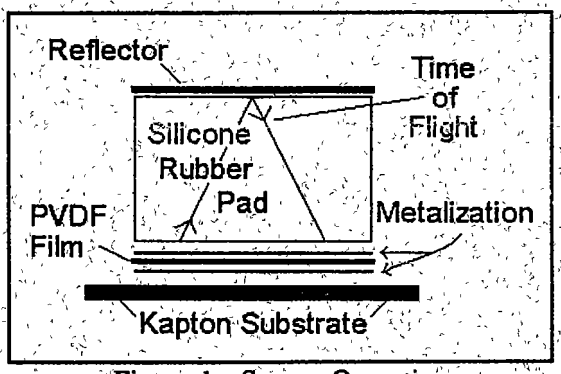

Figure 1. Sensor Operation

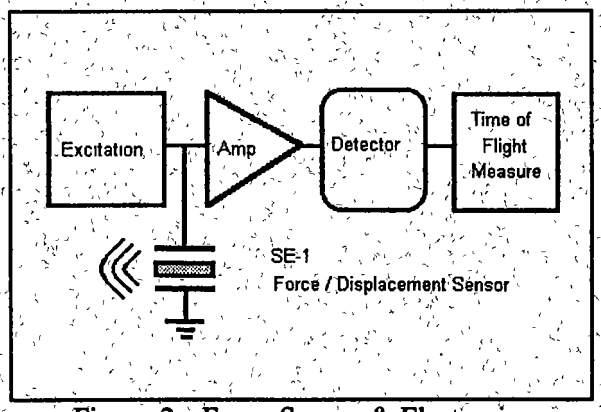

Figure 2. Force Sensor & Electronics

The time it takes for the ultrasonic wave to travel from the PVDF, through the rubber, and back again is the time of flight (TOF). When a force is applied to the sensor, the pad is compressed and the TOF is reduced. The change in TOF is a direct measure of pad compression and, therefore, the amount of force applied to the reflector surface of the rubber.

Figure 2 illustrates the force sensor and the electronics necessary to operate it. Simple excitation circuitry pulses the sensor. The amplifier increases the echo signal to the point where it can be reliably detected. The time-of-flight (TOF) circuit measures the time interval between pulsing the sensor and detection of the echo signal.

Bonneville Scientific, Inc.
1849 W. North Temple, Bldg. E, Salt Lake City, UT 84116
Phone 801 359-0402 Fax 801 359-0416
P/N SE1B-APPN-03

Considerations For Use

The Bonneville Scientific Single Element Force/Displacement Sensors are capable of making very accurate distance or displacement measurements based upon the time of flight of an ultrasonic pulse. Almost all of the errors in converting this displacement measurement into the corresponding force are due to the physical characteristics of the rubber pad. The following information describes relevant rubber characteristics and other considerations which affect measurement accuracy.

Rubber Characteristics

All rubber materials have nonlinear force properties (which change somewhat with temperature). The force-versus-compression characteristics of rubber deviate from a straight line and are different for increasing versus decreasing forces. This straight line deviation or nonlinearity can be compensated for in different ways, depending upon the desired accuracy. The second effect mentioned, hysteresis, is more difficult to correct for since compensation requires knowing the history of forces which were applied to the sensor.

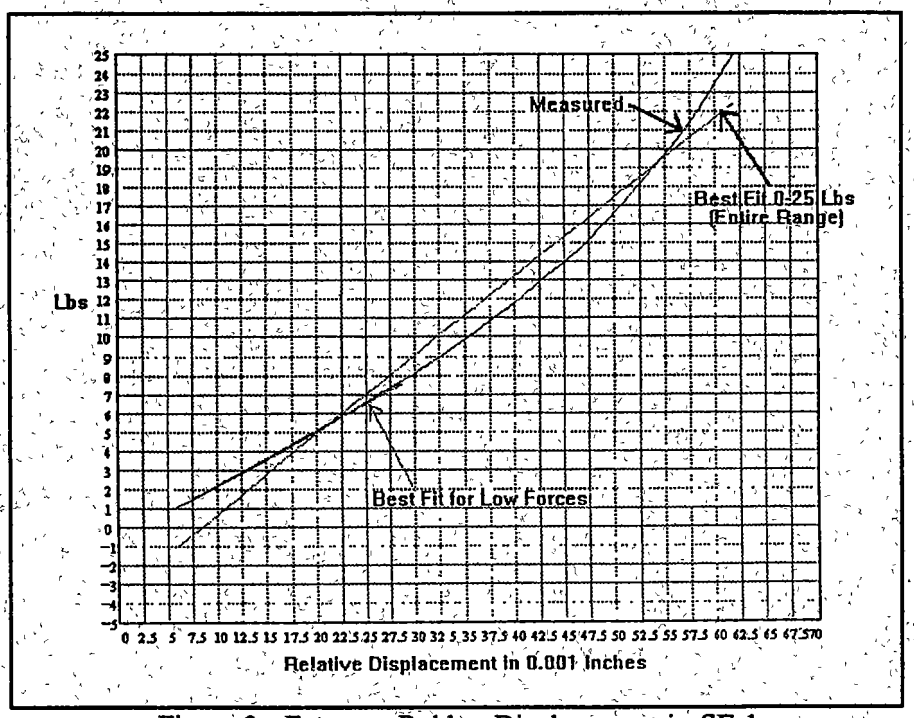

Figure 3. Force vs Rubber Displacement in SE-1

Using the SE-1 Sensor as an example (see last page for SE-1 Sensor specifications), force measurements can be made in the range of 0 to 25 lbs. (Rubber pads of different stiffnesses or lever arms can be used to change this force range.) Figure 3 shows the force versus rubber displacement characteristics for the SE-1 Sensor. If a single best-fit straight line is used to approximate the rubber characteristics, then the absolute accuracy is 10% (*excluding hysteresis*). However, if three line segments are drawn from 0 to 7, 7 to 15, and 15 to 25 lbs, then 1% accuracy is possible.

Other methods of linearization, such as polynomial curve fitting or using a look-up table can increase accuracy. An empirical equation which very closely matches the rubber characteristics of the SE-1 sensor is of the form $Force = a+b/TOF$. a and b are constants that can be determined by fitting this equation to any two points on the curve in Figure 3. In Figure 4, this equation has been fitted to the curve at 2 pounds and 9 pounds of force.

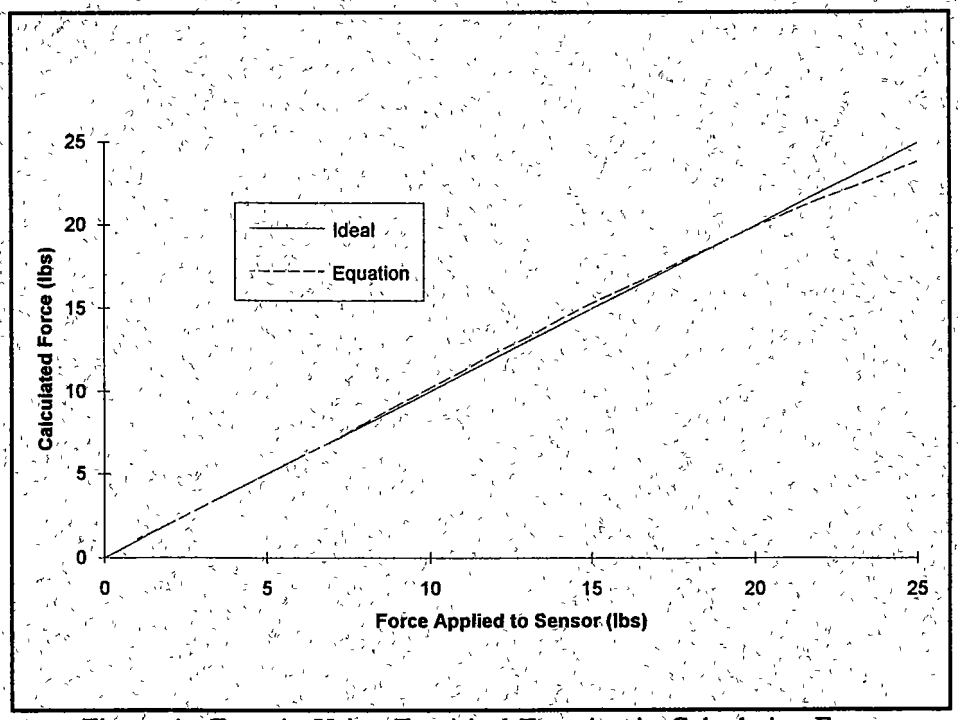

Figure 4. Error in Using Empirical Equation in Calculating Force

Bonneville Scientific, Inc.
1849 W. North Temple, Bldg. E, Salt Lake City, UT 84116
Phone 801 359-0402 Fax 801 359-0416

If a constant force is applied to a rubber material, rubber compression continues to increase at a slow rate. Similarly, when a force is suddenly removed from the rubber, the rubber doesn't immediately returned to its uncompressed thickness. This effect is due to relaxation in the rubber. It is this relaxation which causes hysteresis. Figure 5 shows the relaxation force versus time for the SE-1 Sensor. These data were taken in a material tester by rapidly compressing the sensor until a force of 25 lbs was reached and then recording the change in force on the sensor over time.

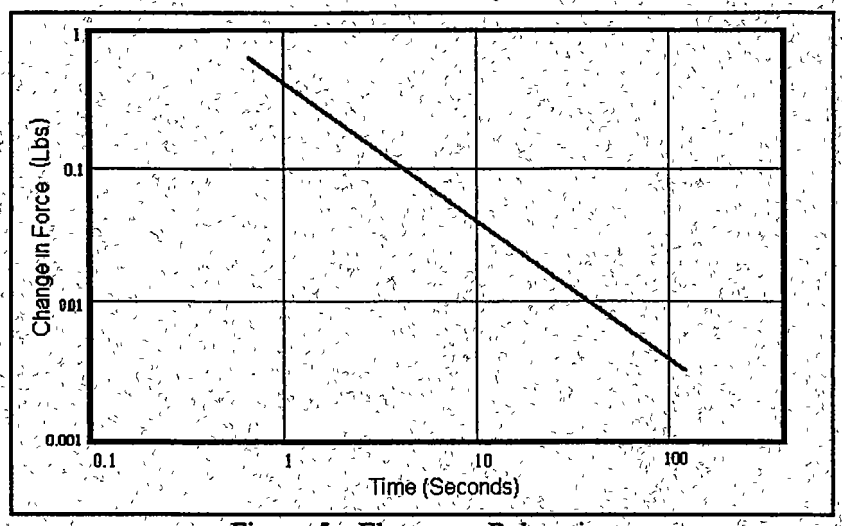

Figure 5. Elastomer Relaxation

The silicone rubber compound used in the SE-1 has been specially formulated to minimize hysteresis and relaxation in order to provide a high degree of linearity in the sensor. The percentage of hysteresis and relaxation is less at lower displacements. In the SE-1, hysteresis is less than 10% over the full 25 lb force range. Also, it takes less than a second for the pad to return to within 2% of its original height after a 25 lb force is removed from the sensor.

It should be noted that the SE-1's accuracy for measuring displacement is not affected by either hysteresis or relaxation. Displacement measurements only depend upon the speed of sound in the elastomer, and speed of sound is not affected by force applied to the sensor. Therefore, in applications which require very high accuracy in measuring forces, the SE-1 can be used to measure the displacement or compression of conventional spring mechanisms which have highly linear force characteristics. For example, the SE-1 could be used to measure the displacement of a coil or leaf spring, or cantilevered beam.

Ultrasonic Reflector

SE Sensors are available with different ultrasonic reflectors, depending upon the application. The most popular type of reflector is a convex metal plate having a one-inch radius of curvature (i.e., the top of the sensor is concave). This reflector geometry allows the sensor to measure the normal component of forces applied within ± 15° of perpendicular to the sensor. If the force to be measured will always be applied perpendicular to the sensor, then a flat metal plate is the preferred type of reflector. With flat reflectors, the force signal is typically twice as large as that from a convex reflector. However, the signal decreases rapidly if the applied force is at an angle. This is shown in Figure 6.

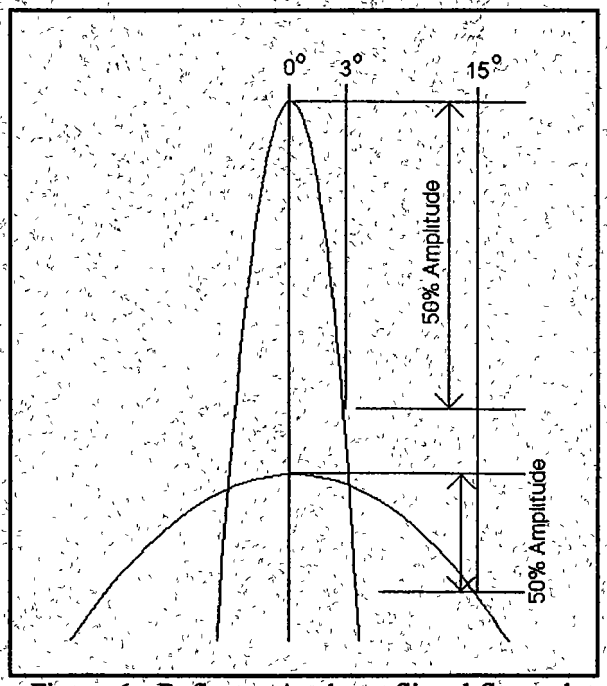

Figure 6. Reflector Angle vs Signal Strength

Temperature

Temperature changes affect the accuracy of both displacement and force measurements. There are three sensor parameters affected by temperature. They are rubber pad thickness, speed of sound in the rubber, and rubber stiffness. For the SE-1 Sensor, which has a force range of 0 to 25 lbs, the rubber's thermal expansion is 0.25%/°C. The variation in speed of sound with increasing temperature is -0.24%/°C. Rubber stiffness changes by less than 0.05%/°C.

When the sensor is used for measuring displacement and it is confined between two surfaces, only the change in speed of sound with temperature is relevant. If the top surface is free to move as temperature increases, then expansion of the elastomer needs to be considered. For force measurement, all three factors must be taken into consideration.

If temperature is expected to change significantly between measurements, the sensor should be "zeroed" just before use. Zeroing consists of reading the sensor signal just before application of the load and comparing this value to those obtained during the measurement.

The maximum temperature the sensor's transducer material can withstand is 80°C (100-150°C on special order). The sensor's silicone rubber pad can withstand temperatures up to 150°C before sustaining permanent damage. Techniques for compensating for temperature changes are described next.

Temperature Compensation Using One Sensor and a Temperature Sensor. In this method, a temperature sensor, such as a thermistor or thermocouple, is placed in the same thermal environment as the SE-1. Temperature readings from this temperature sensor are used to correct the force or displacement calculations derived from the TOF measurements.

Temperature Compensation Using a Modified Single-Element Sensor (SE-1BTC). A relatively thin layer of rigid plastic material is inserted between the force sensor's rubber pad and the transducer film. This material is chosen so that only a small portion of the ultrasonic pulse is reflected from the plastic-rubber interface. Figure 7 shows this configuration, which produces two echoes, one of which only varies with temperature, not with force. The other echo is from the sensor surface which provides the TOF for force calculation. Temperature correction is based upon the change in TOF of the first (reference) echo. Bonneville Scientific is currently developing a modified Single-Element Force Sensor (the SE-1BTC) which will use this means for built-in temperature compensation.

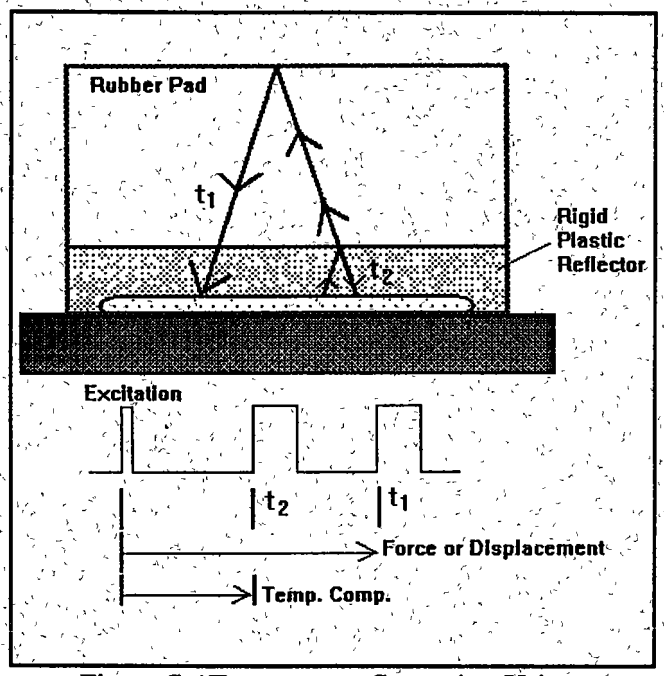

Figure 7. Temperature Correction Using the SE-1BTC

Temperature Compensation Using Two Single-Element Sensors. This method simply uses two single-element sensors placed in the same thermal environment, but only one of them has the load applied to it. The TOF value from the unloaded sensor is used to provide the correction factor for the force calculation.

Temperature Compensation Using Differential Force Sensors. This method relies upon using two force sensors positioned so that when loaded, one sensor is in compression and the other one is in tension. Figure 8 shows one possible configuration for achieving this using two SE-1 sensors.

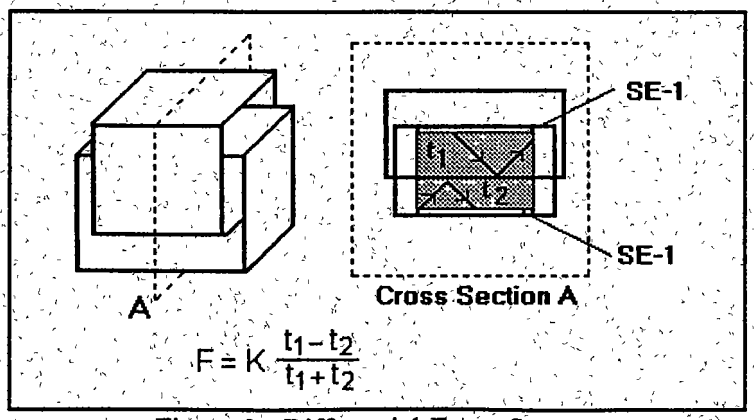

Figure 8. Differential Force Sensors

Force Overload

The SE-1 Sensor is very rugged and can withstand overloads of up to 300 lbs before the rubber pad is damaged.

Sensor Customization

A variety of sensor parameters can be customized for different force ranges or operating environments. (Please consult Bonneville Scientific for specific requests.) The most frequently requested changes are for different force ranges and thinner sensors. Increased force range can be achieved by the use of a stiffer rubber in the sensor's pad. Alternative, a larger diameter pad can be used if sensor width is not critical. Softer rubbers will increase force sensitivity, but very soft rubbers can be relatively weak. Thinner sensors can be made, however, very thin sensors

would have a smaller useful force range. For demanding applications, very small force/displacement sensors can be fabricated. However, support electronics for these sensors may be more expensive due to smaller signals.

Standard Excite and Receive Electronics for the SE-1 Sensor

The SE-1 Sensors are very robust, unlike thermocouples and other low-level transducers. The transducer material in the sensor can produce fairly large signals; thus lending itself more easily to circuit variations. See SE-1 Sensor Electronics Schematic, Figures 9 and 10, on the following pages.

Excitation

Excitation of the sensor's transducer material is accomplished by rapid discharge of its capacitance to ground. A resistor to the positive rail provides sufficient current to charge the transducer in approximately 100 to 200 nanoseconds (≈1000 Ohms for 5 Volt).

Receive

The echo signal from the sensor is a sine wave burst at about 3.5 to 4 .0 MHz. This signal is applied to an amplifier through a high pass filter. The large transient caused by excitation is also propagated through the amplifier, but the amplifier recovers quickly. Virtually any amplifier which will provide 80db of gain between 1 and 7 MHz is adequate. A simple two-to-four-stage discrete transistor amplifier implementation can also cost effectively overcome the bandwidth limitations of common operational amplifiers. The highpass filter removes low frequencies, providing a baseline for signal detection. The resulting signal is applied to the input of a comparator. A very fast comparator is required, such as the very-low-priced MC3540 differential line receiver.

Multiple Sensors

Multiple sensors, such as in a force plate, can be driven with the same circuit by replicating the transistor, resistor, and capacitor used to generate the excitation pulse for each sensor. The echo signals can be multiplexed by using an analog switch.

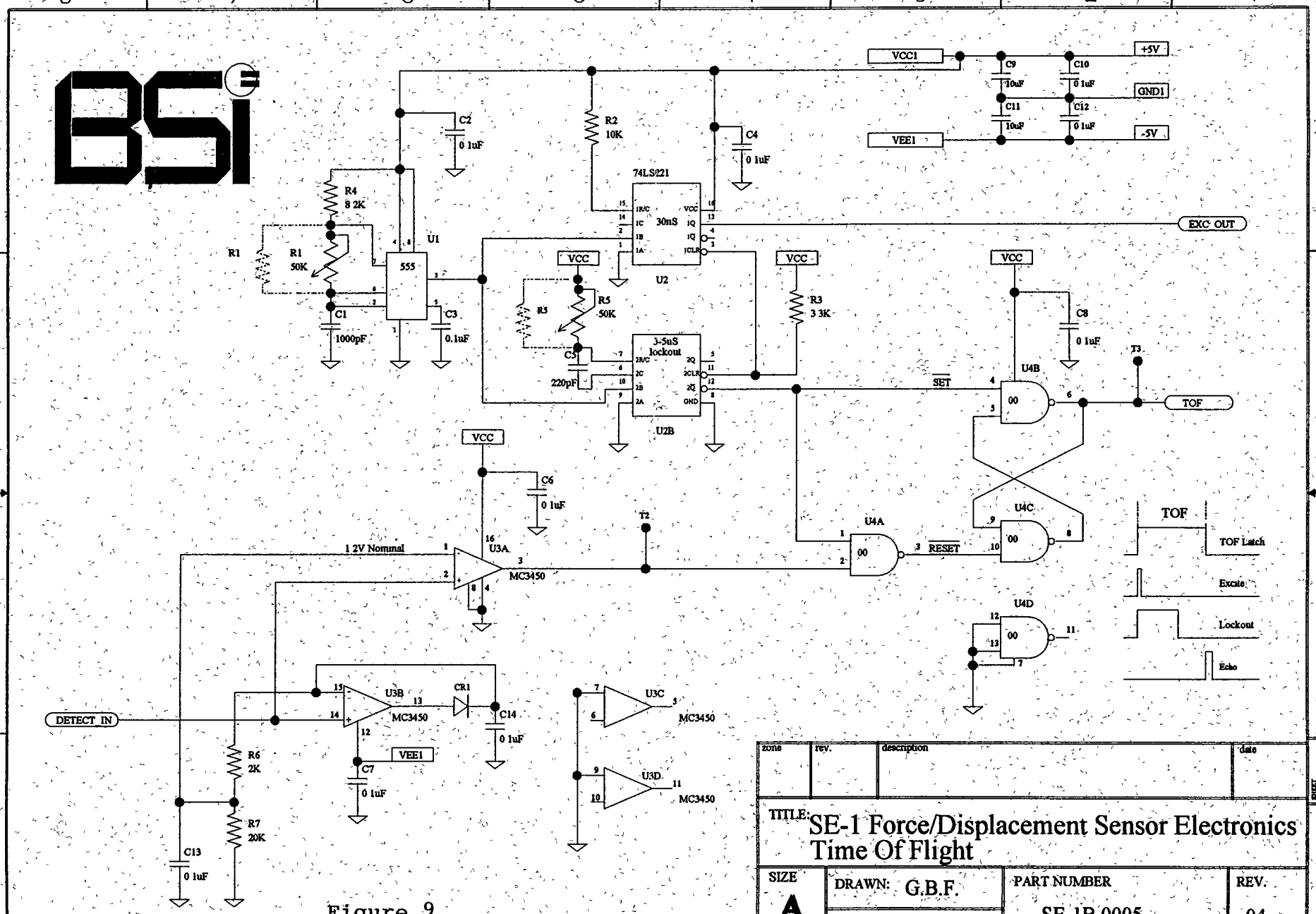

Figure 9

zone	rev.	description	date

TITLE: SE-1 Force/Displacement Sensor Electronics Time Of Flight

SIZE	DRAWN: G.B.F.	PART NUMBER	REV.
A	ENGR: J.J.	SE-1B 0005	04
SCALE:	DATE: 13-SEP-94	SHEET 1 OF 2	

DRAWING NO SE1_XR41.DBF

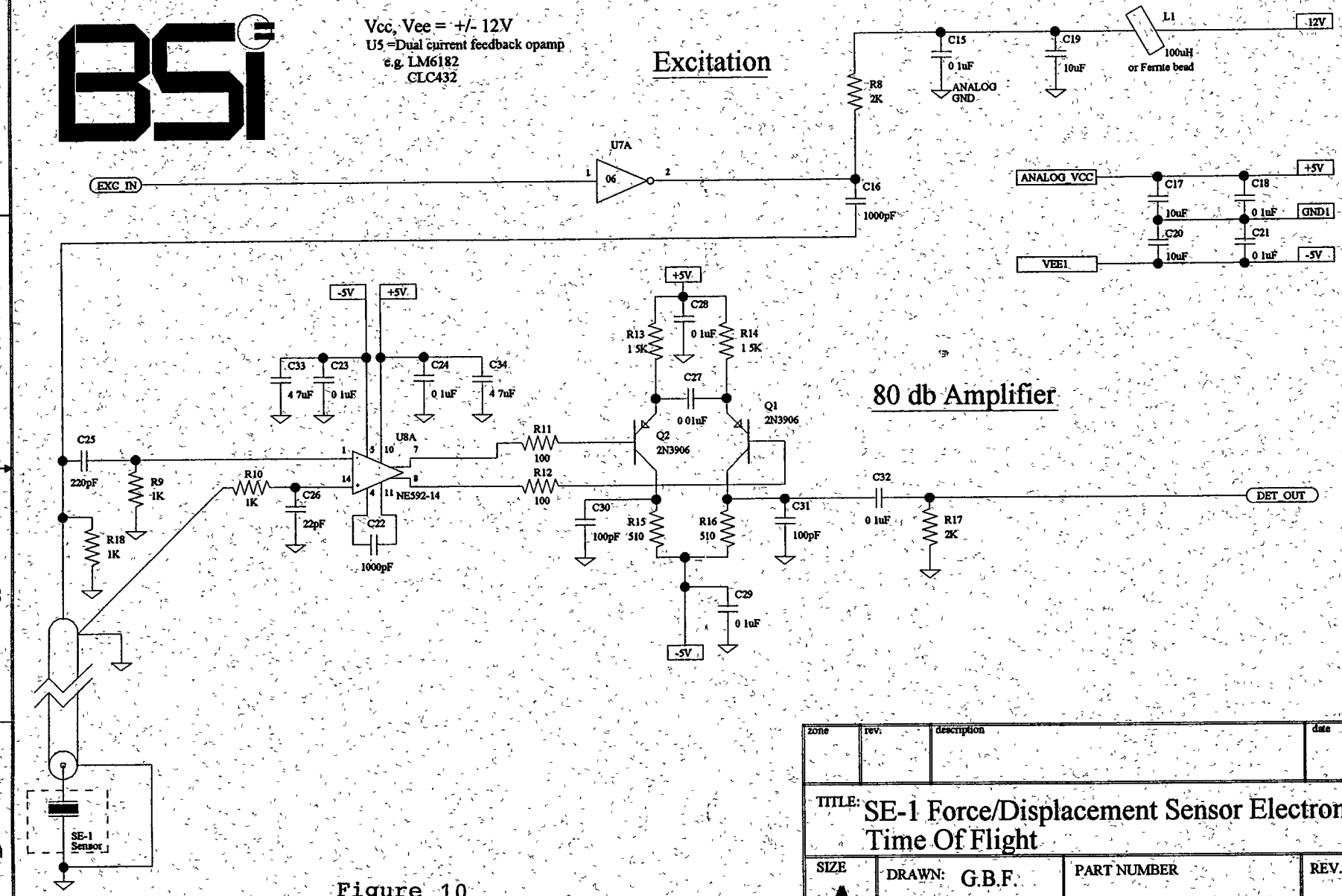

Figure 10

zone	rev.	description	date

TITLE: SE-1 Force/Displacement Sensor Electronics Time Of Flight

SIZE	DRAWN: G.B.F.	PART NUMBER	REV.
A	ENGR: J.J.	SE-1B 0005	04
SCALE:	DATE: 13-SEP-94	SHEET 2 OF 2	

SHEET:

DRAWING NO. SE1_XR42.DRF

SPECIFICATION
BSI Model Number SE-1
Single Element Force/Displacement Sensor

Electrical

Excitation Voltage	1 to 100 V (typical 12V)
Output Signal	≈1/1000 of excitation voltage
Capacitance	100 pF
Impedance	450 Ohms @ 3.5 MHz
Excitation Method	Short rise time pulse

Mechanical

Dynamic Range	0 to 25 lbs (50% displacement of 0.144" pad)
Hysteresis	10% max. deviation for <1 second
Operating Temperature	-40°C to 80°C (100-150°C optional)
Temperature Coefficient	27 nanoseconds/°C
Temperature Coefficient Confined	8 nanoseconds/°C
Maximum Scan Rate	8 microseconds or 125 kHz
Pressure Resolution	38 PSI/microsecond
Force Resolution	8.3 lbs/microsecond
Time-Of-Flight (TOF)	19.8 micro-inches/nanosecond (0.0083 lbs/nanosecond)
Rubber Stiffness	419 lbs/inch @ 20°C
Absolute Accuracy	±11% straight line linearization (excluding hysteresis)
	±1% with 3 line segments (excluding hysteresis)
Relative Accuracy	0.1 %
Overload Limit Compression	Rubber - 300 lbs
Overload Limit Tension	7 lbs

Force measurement

Force	0-25 lbs
Displacement	0 to 0.0625 inch
Time-Of-Flight	0 to 3012 nanoseconds

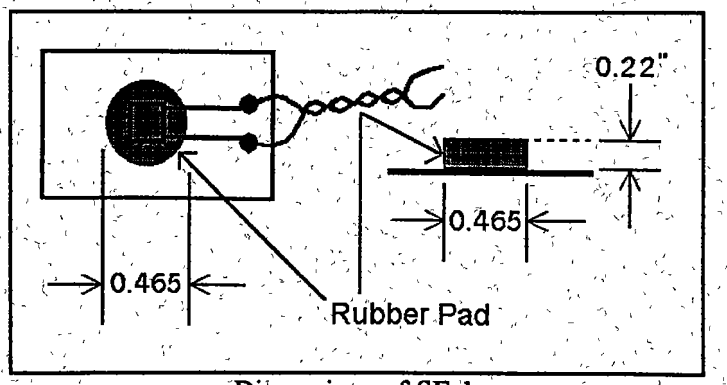

Dimensions of SE-1

Bonneville Scientific, Inc
1849 W. North Temple, Bldg E, Salt Lake City, UT 84116
Phone (801) 359-0402 Fax (801) 359-0416

P/N SE1B-0004-02

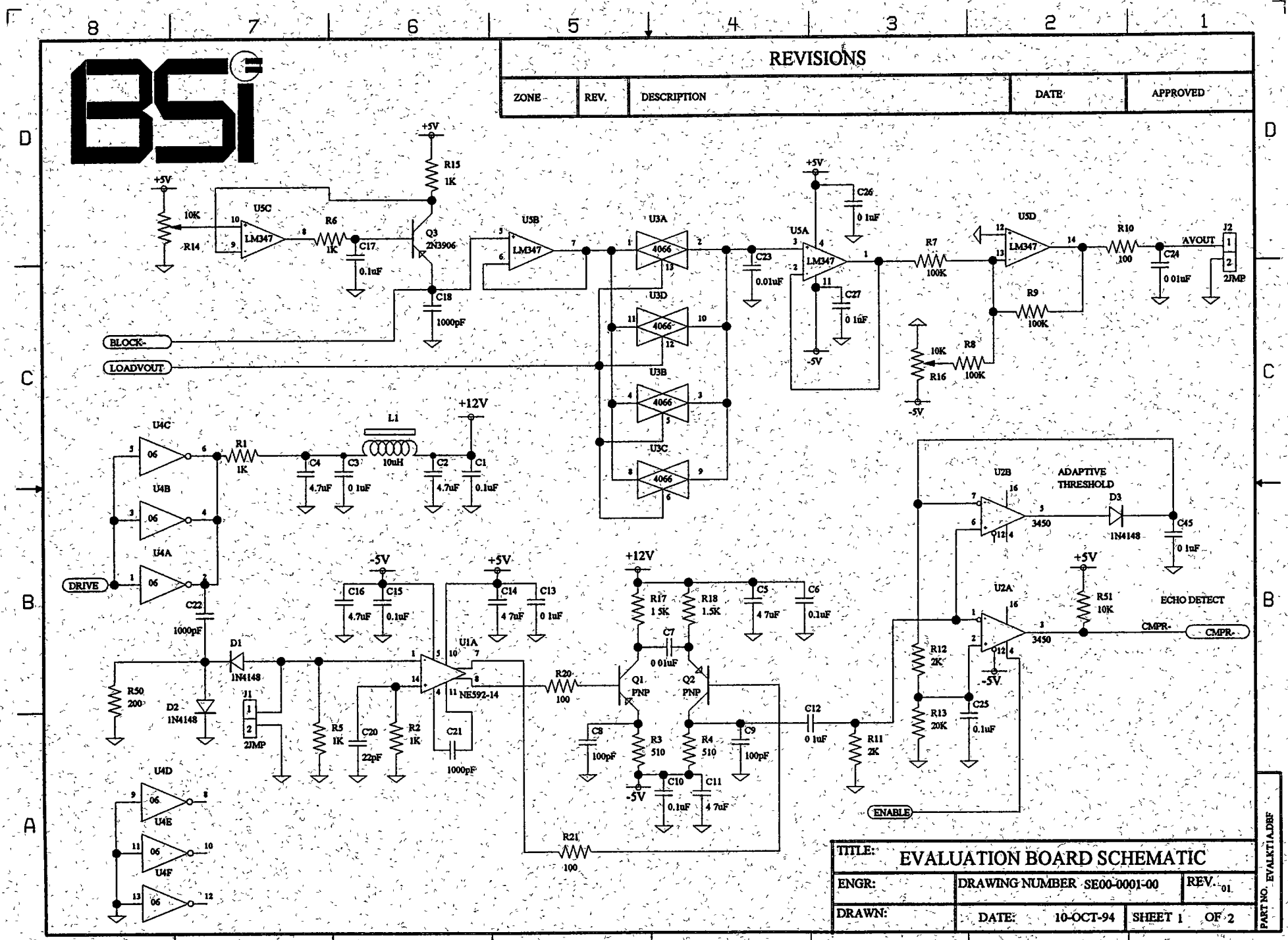
REVISIONS
ZONE
REV.
DESCRIPTION
DATE
APPROVED
BSI
+5V
R15
1K
10K
R14
U5C
LM347
R6
1K
C17
0.1uF
Q3
2N3906
C18
1000pF
U5B
LM347
U3A
4066
U3D
4066
U3B
4066
U3C
4066
BLOCK-
LOADVOUT
C23
0.01uF
U5A
LM347
C26
0 1uF
C27
0 1uF
-5V
R7
100K
U5D
LM347
R10
100
C24
0 01uF
AVOUT
J2
2JMP
R9
100K
R8
100K
10K
R16
+12V
L1
10uH
U4C
U4B
U4A
R1
1K
C4
4.7uF
C3
0 1uF
C2
4.7uF
C1
0.1uF
DRIVE
C22
1000pF
D1
1N4148
D2
1N4148
R50
200
J1
2JMP
C16
4.7uF
C15
0.1uF
C14
4 7uF
C13
0 1uF
U1A
NE592-14
R5
1K
C20
22pF
R2
1K
C21
1000pF
R20
100
R21
100
R17
1 5K
R18
1.5K
C5
4 7uF
C6
0.1uF
C7
0 01uF
Q1
PNP
Q2
PNP
C8
100pF
R3
510
R4
510
C9
100pF
C10
0.1uF
C11
4 7uF
C12
0 1uF
R11
2K
U4D
U4E
U4F
U2B
3450
ADAPTIVE
THRESHOLD
D3
1N4148
C45
0 1uF
U2A
3450
R51
10K
ECHO DETECT
CMPR-
R12
2K
R13
20K
C25
0.1uF
ENABLE
TITLE:
EVALUATION BOARD SCHEMATIC
ENGR:
DRAWING NUMBER SE00-0001-00
REV. 01
DRAWN:
DATE: 10-OCT-94
SHEET 1 OF 2
PART NO. EVALKT1A.DBF

REVISIONS				
ZONE	REV.	DESCRIPTION	DATE	APPROVED

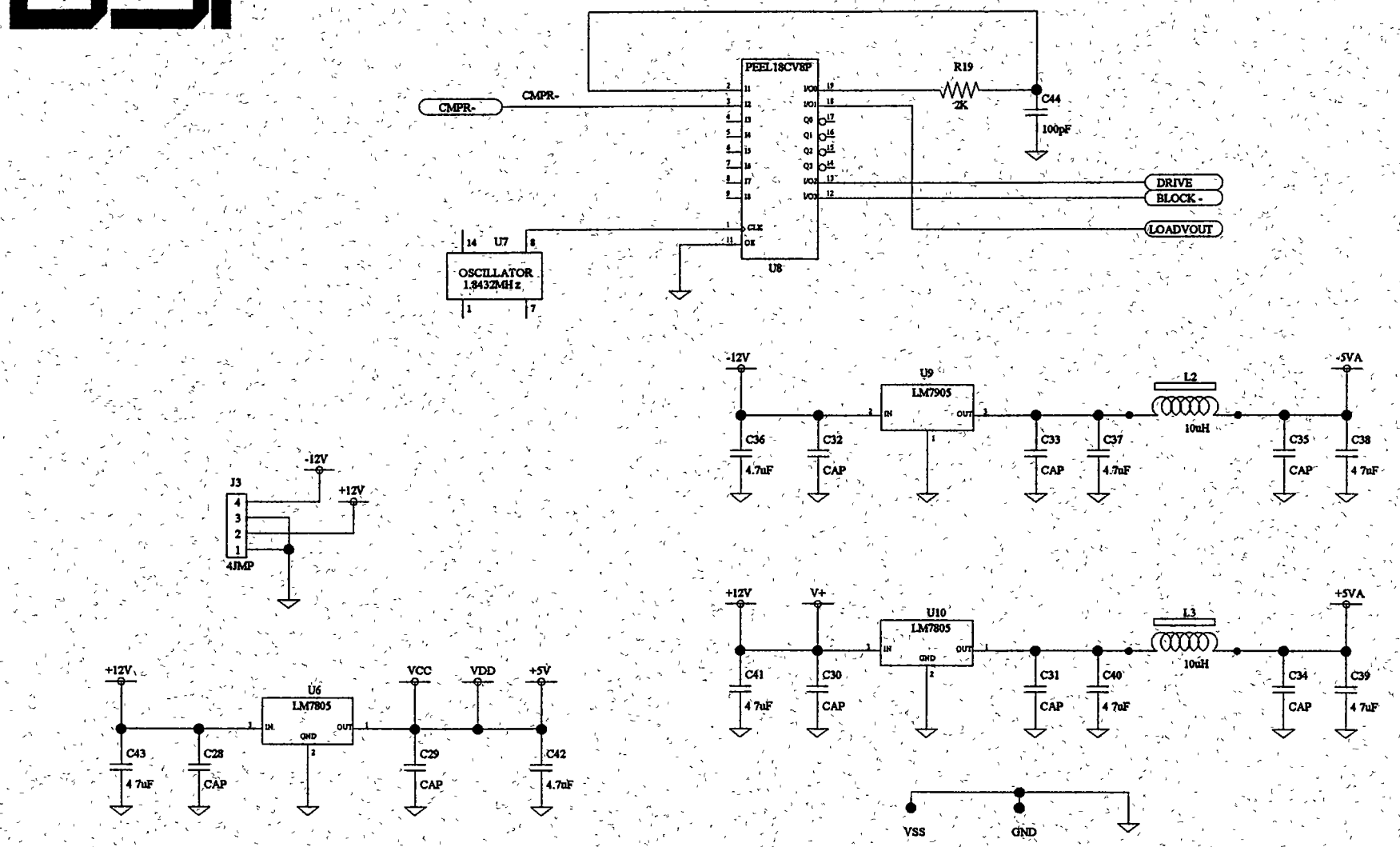

TITLE: EVALUATION BOARD SCHEMATIC			
ENGR:	DRAWING NUMBER		REV. 01
DRAWN:	DATE: 10-OCT-94	SHEET 2 OF 2	

PART NO. EVALKT1B.DBF

Sensor Evaluation Kit

Bonneville Scientific's Sensor Evaluation Kit contains the following:

1. One Single Element Sensor,
2. One electronics assembly,
3. This document
4. The SE-1 specification sheet.

The following explanation assumes you have read the Specification and Application Notes.

What does the circuit do?

The evaluation board excites the sensor, amplifies the echo signal, and then measures the interval from excitation to detection. (i.e. Time-Of-Flight or TOF). The TOF measurement is then converted into a voltage output which is directly proportional to the force applied to the sensor. This *voltage* is also proportional to displacement since *force* is proportional to displacement.

How does the circuit do it?

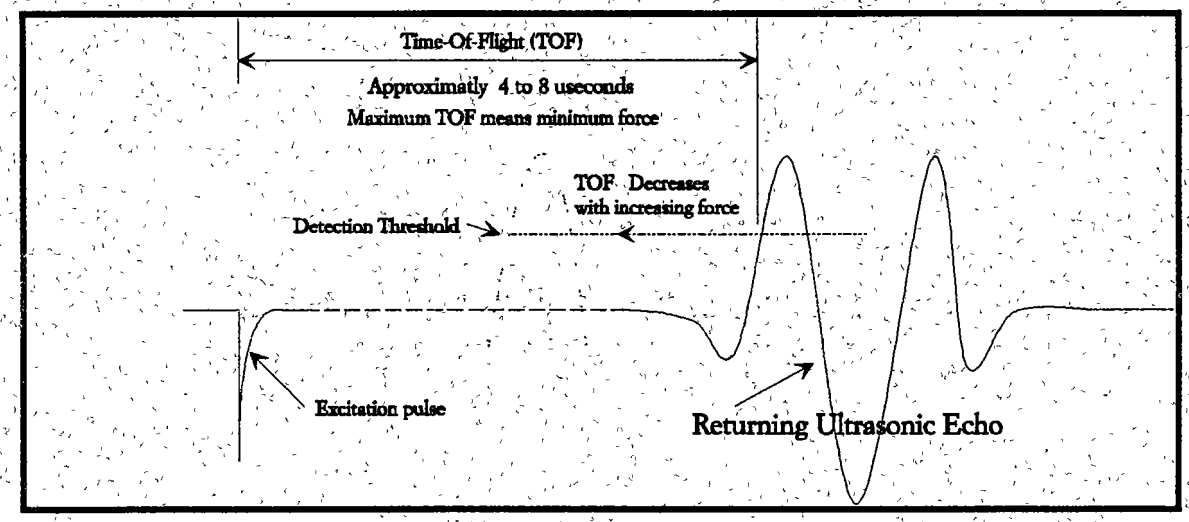

A state machine starts the process by sending an excitation pulse to the sensor. An amplifier then boosts the echo signal so that it can be detected. A tracking threshold detector monitors echo amplitude and sets the detection threshold voltage to maintain detection level at two-thirds of the height of the echo.

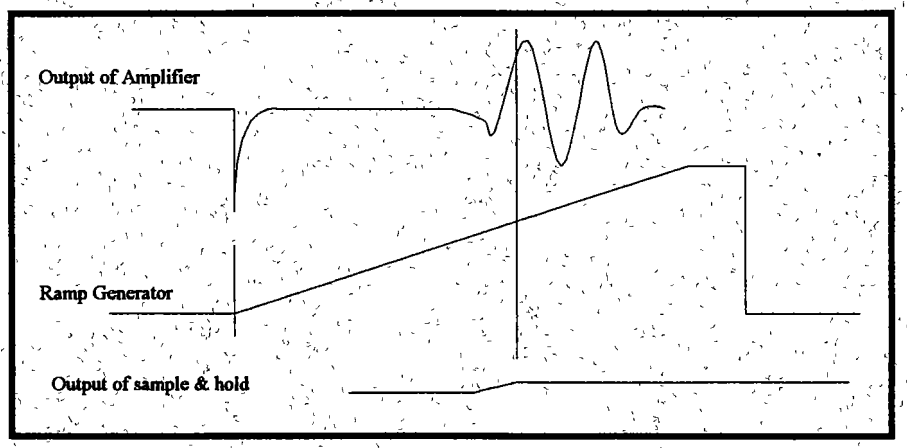

Bonneville Scientific Inc.
1849 W. North Temple, Bldg. E Salt Lake City, Utah 84116
Phone 801-359-0402 FAX 801-359-0416

P/N SE1B 0008-00

Simultaneously with the generation of the excitation pulse, a precision current source begins charging a capacitor at a constant rate. This action creates a linear voltage ramp which is proportional to the TOF of the ultrasonic pulse. An adjustment potentiometer at this point varies the slope of the ramp to match the characteristic force slope of each sensor.

The ramp voltage is sampled at the instant the echo is detected. The sampled voltage is then held on capacitor, buffered and applied to an inverting op amp stage that also has an offset adjustment potentiometer. This adjustment allows the zero reference to be set.

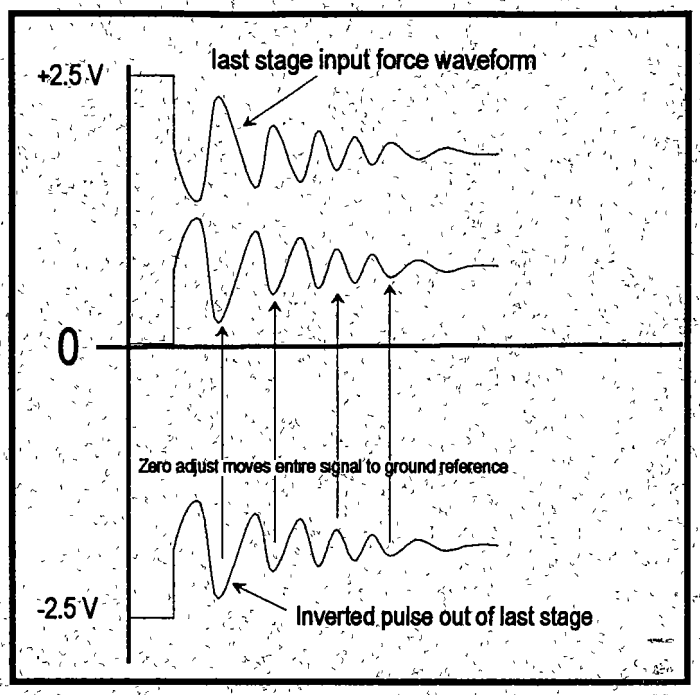

Getting started

You will need three things to get started.

1. *±12 Volt regulated power supply*
2. *the SE-1 sensor supplied with the kit*
3. *Instrument to monitor or display the output*

Power supplies

Any laboratory power supply that can provide +12 VDC at 200 milliamps and -12 VDC at 100 milliamps will work. Make certain that the power supplies obtained can supply the necessary polarity and current.

CAUTION: Make certain the power supplies are **CORRECTLY CONNECTED** before turning on the power. The on-board regulator heat-sinks get **HOT** so use reasonable caution when handling the Evaluation Board.

J3 is the power supply connector. It is a 4 pin 0.1" center connector. See Evaluation Board Component Locations for power supply connections.

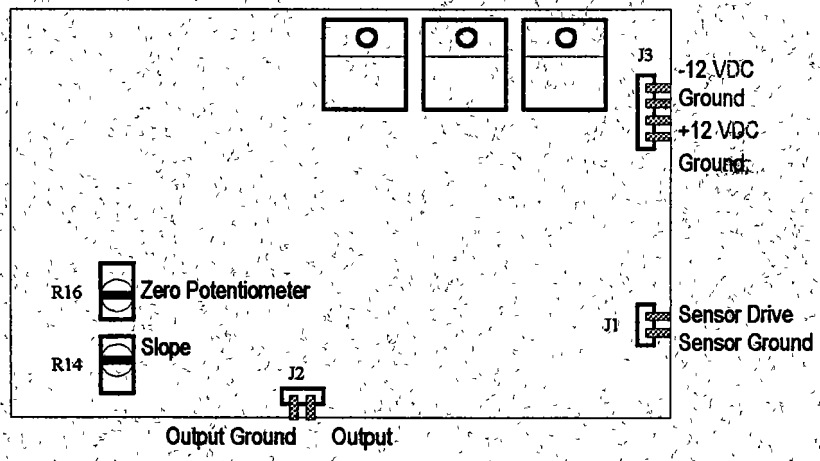

Evaluation Board Component Locations

Sensor

The sensor is connected to J1. Ground on the sensor must be connected to ground on the connector. **Note:** Placing the sensor next to a conductive surface can cause noise problems with the input signal. These can generally be solved by electrically connecting the shield ground to the conductive surface.

Output

Connector **J2** is the output. Simply connect the monitor or display device across the signal and ground pins of **J2**.

The most effective method of displaying the output force signal is with an oscilloscope. This permits seeing the effects of the high sample rate (114 kHz) of the evaluation board. A simple DC volt meter is adequate to display slowly changing force signals.

Adjusting the electronics

The evaluation board is set at the factory to provide an output of 0 to 2.5 VDC for 0 to 25 lbs force applied to the sensor. Characteristics of the sensors ***best fit straight line*** are reflected in the specification sheet shipped with the evaluation kit. For the highest accuracy, the electronics must be adjusted for each sensor. However, once adjusted, the *relative* accuracy of other sensor's are minimally affected by the calibration.

Step by step instructions for calibration:

Place the Evaluation Board in front of you with J1 on the lower right hand corner. The potentiometer adjustments are now on the lower-left. The lower potentiometer is the SLOPE or Gain-Setting adjustment. The upper is the ZERO adjustment.

Procedure for Sensor Calibration

1) Using the sensors characteristic force curve, begin by determining the best linear fit straight line over the range of forces for which the sensor will be used.
2) Establish the two points along the sensors characteristic force curve where the curve and the best linear fit line intersect. Determine the approximate force at these two points (F_1 and F_2). For example; over the entire range of 0-25 lbs for the SE-1 sensor, the two points (F_1 and F_2) correspond to 5.7 and 19.3 lbs. (see Force vs. Displacement graph on specification sheet.)
3) Apply the greater of the two forces (F_2) to the sensor, and record the output voltage (V_2) at **J2**.
4) Apply F_1 to the sensor and record the output voltage (V_1).
5) Calculate the Range: $R_m = V_2 - V_1$.
6) Calculate the difference (R_d) between the measured range (R_m) and the target range [$R_t = (F_2 - F_1)/10$].

   $R_d = R_m - R_t$.
7) Calculate the gain setting output voltage.

   GAIN-SET-VOLTAGE (or *slope* adjustment) = $V_1 + R_d$.
8) With F_1 Applied to the sensor, adjust the gain potentiometer (R14) so the output = calculated output voltage (**GAIN-SET-VOLTAGE**).
9) Adjust the offset pot (R16) until output voltage is $F_1/10$.
10) Repeat steps 3-9 until you are satisfied with the calibration.

Evaluation Board Specifications

Power Supplies ..... ±12 VDC 10%

+12 V @200 mAmps

-12 V @100 mAmps

Sample Rate..... 8.8µSeconds (113.6 kHz)

Output Drive into 10KΩ ..... 11 mAmps

Note: The output has a 100Ω series resistance to protect it.

Bonneville Scientific Inc.
1849 W. North Temple, Bldg. E Salt Lake City, Utah 84116
Phone 801-359-0402 FAX 801-359-0416
P/N SE1B 0008-00

Output Characteristics(With SE-1) ..... 0 to 2.5 VDC for 0 to 25 lbs

±10% Accuracy with enclosed sensor

Bonneville Scientific Inc.
1849 W. North Temple, Bldg. E Salt Lake City, Utah 84116
Phone 801-359-0402 FAX 801-359-0416
P/N SE1B 0008-00

BONNEVILLE SCIENTIFIC, INC. ("BSI") TERMS AND CONDITIONS OF SALE

Please Note: Notwithstanding any different or additional terms which may be embodied in Buyer's order, acceptance of Buyer's order is expressly made conditional on Buyer's assent to the terms and conditions set forth below and on any attachments hereto, which shall constitute the complete agreement between the parties. The terms and conditions of sale are as follows:

1. **Delivery**. Each order is subject to approval by BSI, in its sole discretion All shipments shall be FOB place of origin. Title to all goods shall pass to Buyer upon delivery to the common carrier, unless otherwise agreed to by BSI in writing. BSI shall have the right to deliver all goods covered hereby at one time or in portions from time to time. BSI shall not be liable for delays in delivery or for failure to perform due to causes beyond the reasonable control of BSI. These causes shall include, without limitation, acts of God, acts or omissions by Buyer or any third parties, delays in transportation, or inability to obtain necessary labor, materials or supplies In the event of any delay, the contractual date of delivery, if any, shall be extended for a period equal to the time lost as a consequence of such delay without penalty to BSI BSI shall be entitled to refuse or to delay shipments for failure by Buyer to pay any payments due BSI, whether on this or any other contract between BSI and Buyer

2 **Cancellation**. Orders accepted by BSI may be cancelled by Buyer only upon written consent of BSI Special orders are not subject to cancellation. In the event of cancellation or other withdrawal of an order for any reason, and without limiting any other remedy which BSI may have under the Uniform Commercial Code of Utah, Buyer shall agree to indemnify BSI from loss

3 **Return Policy**. Approval must be obtained from BSI prior to return of any merchandise. All material returned without prior approval will be refused automatically.

4. **Terms**. Terms of payment are net thirty (30) days from date of invoice unless otherwise specified by BSI in writing. BSI discourages "credit" transactions In the event that payment is not received within such thirty (30) day period, any unpaid balance shall bear interest at the rate of eighteen (18%) percent per annum from the 31st day after delivery BSI retains, and Buyer hereby grants BSI, a security interest in the goods, including all accessions to and replacements of them until Buyer has made payment in full in accordance with the terms hereof, and Buyer shall cooperate fully with BSI in executing such documents including a Uniform Commercial Code financing statement, and accomplishing such fillings and/or recording thereof as BSI may deem necessary for the perfection and protection of such security interest.

5. **Taxes**. BSI's prices do not include sales, use, excise or similar taxes Accordingly, Buyer shall, in addition to prices specified by BSI, pay any sales, use, excise or similar tax attributable to the sales of the goods covered hereby, or in lieu thereof provide BSI with tax exemption certificates acceptable to the taxing authorities.

6. **Inspection and Acceptance of Goods**. Final inspection and acceptance of the goods shall be at Buyer's facility. Buyer shall be responsible for conducting the final acceptance tests, if necessary. These tests shall be completed promptly and in no event later than ninety (90) days after delivery, at which time Buyer shall be deemed to have accepted the goods in accordance with Paragraph Nine (9). Any discrepancy in shipment quantity must be reported within five (5) working days of receipt.

7. **Changes In Price**. The selling price of the goods shall be that which is identified in writing on the BSI invoice. Unless otherwise specifically agreed in writing, BSI shall have no duty to agree to fill future orders from Buyer, nor to provide the goods at the same price. Each order is subject to approval in the sole discretion of BSI. BSI reserves the right to increase the selling price of any and all undelivered goods ordered by Buyer which are affected by an increase in BSI's cost of such goods due to an increase by BSI's materials suppliers. The selling price shall, upon an increase in price by BSI's supplier, be increased by a percentage equal to the percentage of increase in BSI's cost for the goods, and Buyer agrees to pay any such increased price in accordance with the terms hereof

8 **Buyer's Terms and Conditions**. To negotiate individually the terms and conditions of each sales contract would substantially impair BSI's ability to provide efficient service Accordingly, goods furnished and services rendered by BSI are sold only on the terms and conditions stated herein. Notwithstanding any terms of conditions of conditions on Buyer's order, BSI's performance of any contract is expressly made conditional on Buyer's agreement to BSI's Terms and Conditions of Sale unless otherwise specifically agreed to in writing by BSI. In the absence of such an agreement commencement of performance and/or delivery shall be for Buyer's convenience only and shall not be deemed or construed to be acceptance of Buyer's terms and conditions, or any of them. If a contract is not earlier formed by mutual agreement in writing, acceptance of any of goods or services by Buyer shall be deemed acceptance of the terms and conditions stated herein.

Copies of Paragraphs 9, 10, 11 and 12 shall be transmitted by Buyer to all subsequent purchasers.

9. **Warranties and Remedies**. Buyer assumes all risk and liability for loss, damage or injury to person or property of Buyer or others arising out of the use or possession of the goods purchased by Buyer. BSI warrants that at the time of delivery, materials and workmanship are in accordance with their written specifications and free of defects, but makes no warranty with respect to the fitness of such products for Buyer's particular requirements. BSI agrees, as BSI shall elect, to credit the account of Buyer or replace without charge to Buyer all goods which, at the time of delivery, are not in accordance with manufacturer's specifications, but only if Buyer returns such goods to BSI's plant within ninety (90) days from date of delivery, in accordance with Paragraph 3, in original package and in good condition, without their serial numbers or any part thereof altered, defaced or removed, and accompanied by a specification in writing of the defect(s) involved. Buyer shall notify BSI in each instance when Buyer intends to return goods which Buyer believes are not in accordance with manufacturer's specifications and BSI shall be entitled to examine such goods. BSI's sole liability shall be to credit the account of Buyer or to replace goods which are not in accordance with manufacturer's specifications and in no event shall BSI be liable for damage of any kind. The foregoing remedy as provided herein shall be the sole and exclusive remedy of the Buyer.

10. **Exclusion of Warranties and Remedies**. BSI HEREBY DISCLAIMS ANY AND ALL REPRESENTATIONS AND WARRANTIES, WHETHER EXPRESS OR IMPLIED, WHETHER ARISING IN FACT OR BY OPERATION OF LAW, AS TO THE CONDITION, DESIGN, OPERATION, MERCHANTABILITY, QUALITY OF THE MATERIAL OR WORKMANSHIP, OR FITNESS FOR USE FOR THE BUYER'S PARTICULAR PURPOSE OR ANY OTHER REPRESENTATIONS OR WARRANTY WHATSOEVER, WHICH DOES NOT APPEAR ON THE FACE HEREOF AND BSI SPECIFICALLY DISCLAIMS ANY AND ALL IMPLIED WARRANTIES OF MERCHANTABILITY, ANY AND ALL IMPLIED WARRANTIES OF FITNESS FOR A PARTICULAR PURPOSE, AND ANY AND ALL IMPLIED WARRANTIES ARISING FROM COURSE OF PERFORMANCE, COURSE OF DEALING OR USAGE OF TRADE. BSI SHALL IN NO EVENT BE LIABLE FOR ANY DAMAGE OR LOSS DUE TO DELAY IN DELIVERIES. DELAY IN SERVICE, OR USE OR INTERRUPTION OF USE OR BUSINESS, OR LOSS OF PROFITS OR ANY OTHER CONSEQUENTIAL OR INCIDENTAL DAMAGES.

11. **Technology Rights**. If the goods purchased by Buyer are manufactured by BSI, they are subject to a BSI patent or other intellectual property. No license to alter the product or to change the application of the product is granted. BSI shall have no liability of any kind with respect to any actual or alleged infringement of any United States or foreign patent, trademark or similar rights.

12. **Installation and Use**. All force/displacement sensors or parts purchased by Buyer are to be used in a manner consistent with the specifications provided by BSI. Only the known limitations are listed on that specifications sheet. Buyer is hereby warned that the force/displacement sensor is experimental, and that there may be other limitations which have yet to be discovered or understood. If Buyer does not understand the technical information, Buyer should consult with an expert in the field. The force/displacement sensor(s) are not sold to be installed in products which, in turn, will be sold to the consumer or commercial public. The sensor(s) are sold for test purposes only. Buyer shall be solely responsible for the installation and operation of the force/displacement sensor(s) covered hereby including, without limitation, the obtaining of all permits, licenses or certificates required for the installation or use of such force/displacement sensor(s) Each sensor sold is sold only for testing purposes, by Buyer, in Buyer's facility. The sensor is not intended for use in situations involving significant risks, such as in life support systems, human implantation or nuclear facilities or systems, by way of example, but without limitation intended.

13 **Technical Advice and Data**. Any technical advice offered or given by BSI in connection with the use of any force/displacement sensor is as an accommodation to Buyer, without charge, and BSI shall have no responsibility or liability whatsoever for the content or use of such advice Buyer shall not use, duplicate or disclose any technical data delivered or disclosed by BSI to Buyer for any purpose other than for installation, operation or maintenance of goods purchased by Buyer, without BSI's prior written consent

14 **Special Orders**. Special orders of Buyer shall be governed by this Agreement, as supplemented by any written agreement between the parties in respect to the special order. Non-recurring engineering, such as for tooling, set-up, fitting-up, drawings, design information and partial preparation charges, when invoiced, shall cover only part of the cost to BSI. Accordingly, Buyer does not acquire any right, title or interest in any non-recurring engineering, nor to the design information or any invention resulting therefrom.

15. **Wage and Hour Compliance**. BSI hereby certifies that it is in compliance with all applicable requirements of the Fair Labor Standards Act of 1938 as amended and with the regulations and orders of the Administration of the Wage and Hour Division issued thereunder

16 **Disputes**. All disputes under any contract concerning the goods not otherwise resolved between BSI and Buyer shall be resolved in a court of competent jurisdiction in the state of Utah and in no other place, provided, however, that in BSI's sole discretion such action may be heard in some other place designated by BSI (if necessary to acquire jurisdiction over a third person), so that the dispute can be resolved in one action. Buyer agrees to appear in any such action and hereby consents to the jurisdiction of such court. No action, regardless of form, arising out of, or in any way connected with the goods furnished or services rendered by BSI, may be brought by Buyer more than one (1) year after the cause of the action that accrued.

17 **Integration and Assignment**. This instrument contains the entire and the only agreement between the parties with respect to the goods and any representation, promise or condition herewith not specifically incorporated herein in writing shall be effective only when embodied in a written agreement signed by the party to be charged except for the implementation of price increases by BSI pursuant to Paragraph 6 The provision of this Agreement shall not be changed or modified except by an instrument in writing signed by the parties hereto Any assignment of this Agreement or any rights or obligations hereunder by Buyer shall be void without BSI's written consent.

18 **Governing Law**. This Agreement and performance by the parties hereunder shall be construed in accordance with the laws of the state of Utah.

19. **Notices**. Any notice to BSI under this Agreement shall be in writing and shall be served upon BSI by personal service, or by leaving a copy of such notice at the address set forth below, whereupon service of the notice shall be deemed completed; or by mailing copy of such notice by certified mail or registered mail, postage prepaid, with return receipt requested, addressed as follows:

BONNEVILLE SCIENTIFIC, INC., 1849 West North Temple, Building E, Salt Lake City, Utah 84116

PACKING SLIP

BONNEVILLE SCIENTIFIC, INC.
1849 W. North Temple, Bldg. E
Salt Lake City, UT 84102

INVOICE NO: 1050 DATE: 7/21/95
ORDER NO: MAS071995 DATE: 7/19/95
CUSTOMER P.O.: GX-D-590335
CONTACT: Joe Paradiso

BILL TO
Joe Paradiso
MIT Media Lab
E15-487
20 Ames St.
Cambridge, MA 02139

SHIP TO
SAME AS BILL TO

SALES REP	DATE SHIPPED	F.O.B. FACTORY	SHIPPED VIA	TERMS
G.B.F.	7/21/95	SALT LAKE CITY, UT	U.S.Mail	Net 30 Days

QUANTITIES ORDERED	QUANTITIES SHIPPED	BACK ORDERED	PART NUMBER	DESCRIPTION
1	1	0	SE00-0001-00	SE-1 Evaluation Kit