Silicon PIN Photodiode

Description

BPV22NF(L) is a high speed and high sensitive PIN photodiode in a plastic package with a spherical side view lens.
The epoxy package itself is an IR filter, spectrally matched to GaAs on GaAs and GaAlAs on GaAlAs IR emitters (λ_p = 950 nm, $s_{rel}(\lambda$ = 875 nm) > 90 %).
Lens radius and chip position are perfectly matched to the chip size, giving high sensitivity without compromising the viewing angle.
In comparison with flat packages the spherical lens package achieves a sensitivity improvement of 80%.

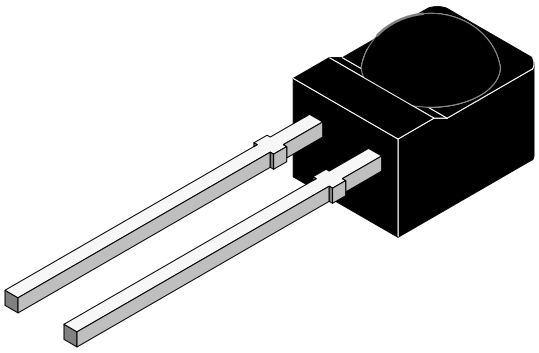

94 8633

Features

- Large radiant sensitive area (A=7.5 mm^2)
- Wide viewing angle $\varphi = \pm 60$ °
- Improved sensitivity
- Fast response times
- Low junction capacitance
- Plastic package with universal IR filter
- Option ”L”: long lead package optional available with suffix ”L”; e.g.: BPV23FL

Applications

Infrared remote control and free air transmission systems in combination with IR emitter diodes (TSU.–, TSI.–, or TSH.–Series). High sensitivity detector for high data rate transmission systems.
The IR filter matches perfectly to the high speed infrared emitters in the 830 nm to 880 nm wavelength range.

Absolute Maximum Ratings

T_{amb} = 25°C

Parameter	Test Conditions	Symbol	Value	Unit
Reverse Voltage		V_R	60	V
Power Dissipation	$T_{amb} \leqq 25$ °C	P_V	215	mW
Junction Temperature		T_j	100	°C
Operating Temperature Range		T_{amb}	–55...+100	°C
Storage Temperature Range		T_{stg}	–55...+100	°C
Soldering Temperature	t ≦ 5 s	T_{sd}	260	°C
Thermal Resistance Junction/Ambient		R_{thJA}	350	K/W

Basic Characteristics

T_{amb} = 25°C

Parameter	Test Conditions	Symbol	Min	Typ	Max	Unit
Forward Voltage	I_F = 50 mA	V_F		1	1.3	V
Breakdown Voltage	I_R = 100 μA, E = 0	$V_{(BR)}$	60			V
Reverse Dark Current	V_R = 10 V, E = 0	I_{ro}		2	30	nA
Diode Capacitance	V_R = 0 V, f = 1 MHz, E = 0	C_D		70		pF
Serial Resistance	V_R = 12 V, f = 1 MHz	R_S		400		Ω
Open Circuit Voltage	E_e = 1 mW/cm^2, λ = 950 nm	V_o		370		mV
Temp. Coefficient of V_o	E_e = 1 mW/cm^2, λ = 950 nm	TK_{Vo}		–2.6		mV/K
Short Circuit Current	E_e = 1 mW/cm^2, λ = 950 nm	I_k		80		μA
Reverse Light Current	E_e = 1 mW/cm^2, λ = 870 nm, V_R = 5 V	I_{ra}	55	85		μA
Temp. Coefficient of I_{ra}	E_e = 1 mW/cm^2, λ = 950 nm, V_R = 10 V	TK_{Ira}		0.1		%/K
Absolute Spectral Sensitivity	V_R = 5 V, λ = 870 nm	s(λ)		0.57		A/W
	V_R = 5 V, λ = 950 nm	s(λ)		0.6		A/W
Angle of Half Sensitivity		φ		±60		deg
Wavelength of Peak Sensitivity		λ_p		940		nm
Range of Spectral Bandwidth		$\lambda_{0.5}$		790...1050		nm
Quantum Efficiency	λ = 950 nm	η		90		%
Noise Equivalent Power	V_R = 10 V, λ = 950 nm	NEP		4 x 10^{-14}		W/√ Hz
Detectivity	V_R = 10 V, λ = 950 nm	D^*		6x10^{12}		cm√Hz/W
Rise Time	V_R = 10 V, R_L = 1k Ω, λ = 820 nm	t_r		100		ns
Fall Time	V_R = 10 V, R_L = 1k Ω, λ = 820 nm	t_f		100		ns
Cut–Off Frequency	V_R = 12 V, R_L = 1k Ω, λ = 870 nm	f_c		4		MHz
	V_R = 12 V, R_L = 1k Ω, λ = 950 nm	f_c		1		MHz

Typical Characteristics (T_{amb} = 25°C unless otherwise specified)

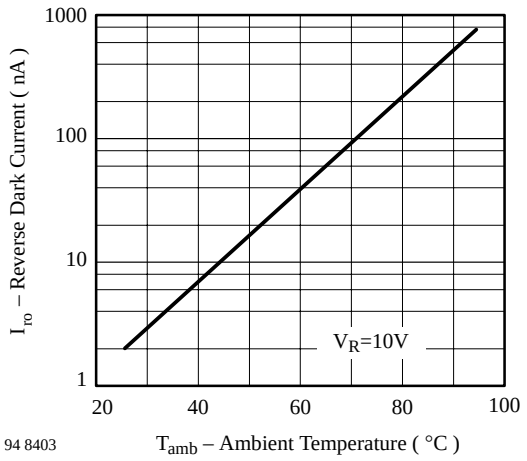

Figure 1. Reverse Dark Current vs. Ambient Temperature

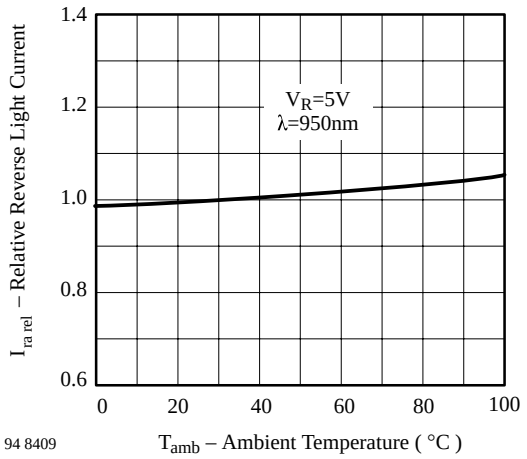

Figure 2. Relative Reverse Light Current vs. Ambient Temperature

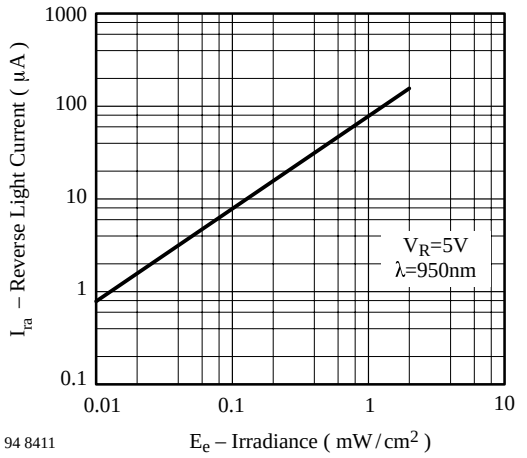

Figure 3. Reverse Light Current vs. Irradiance

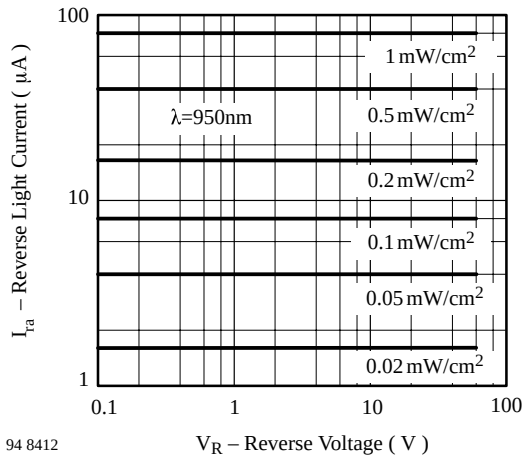

Figure 4. Reverse Light Current vs. Reverse Voltage

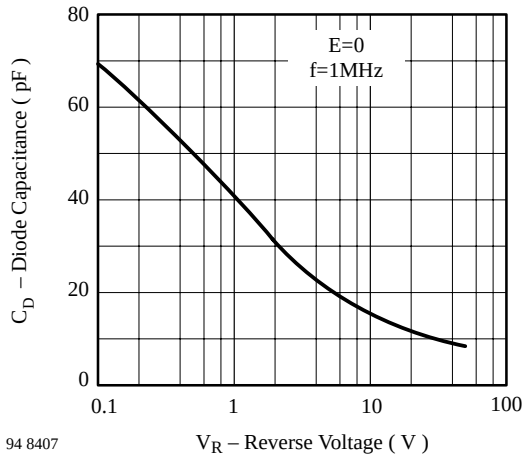

Figure 5. Diode Capacitance vs. Reverse Voltage

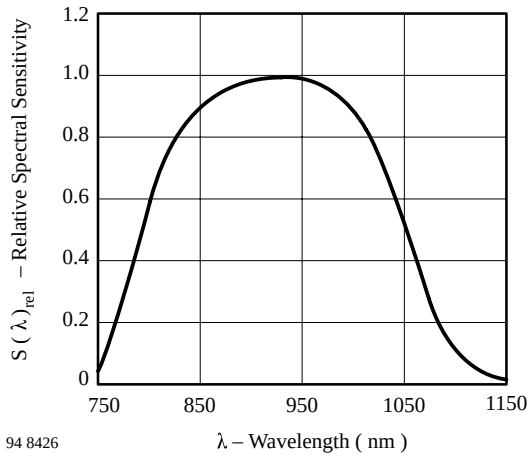

Figure 6. Relative Spectral Sensitivity vs. Wavelength

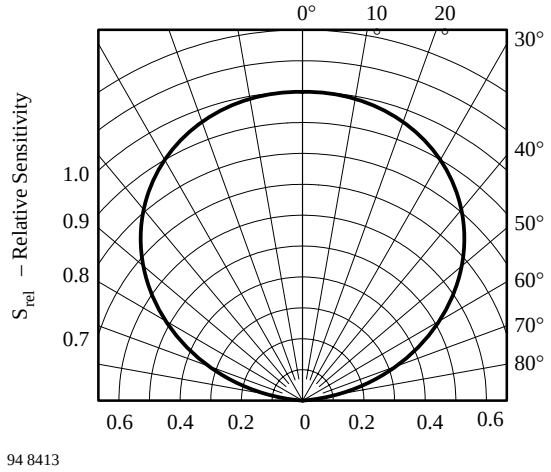

Figure 7. Relative Radiant Sensitivity vs. Angular Displacement

Dimensions BPV22NF in mm

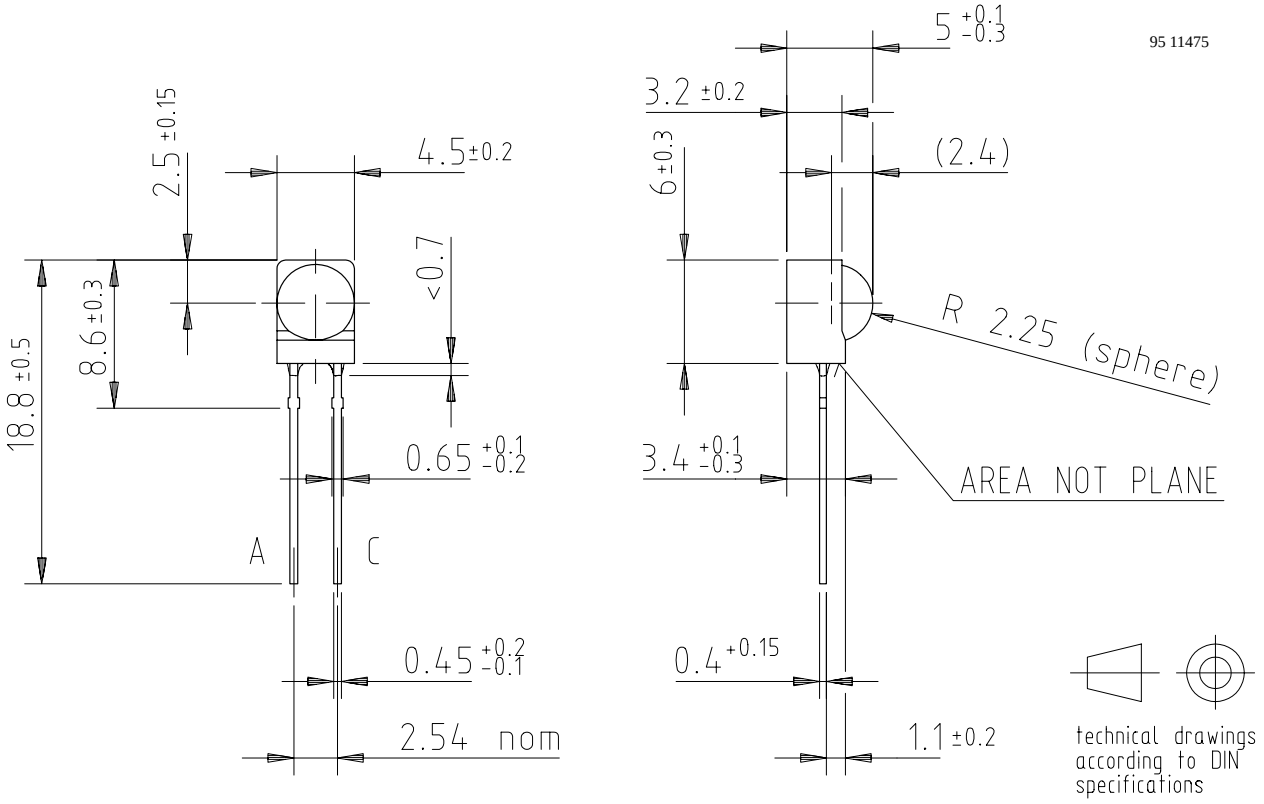

Dimensions BPV22NFL in mm

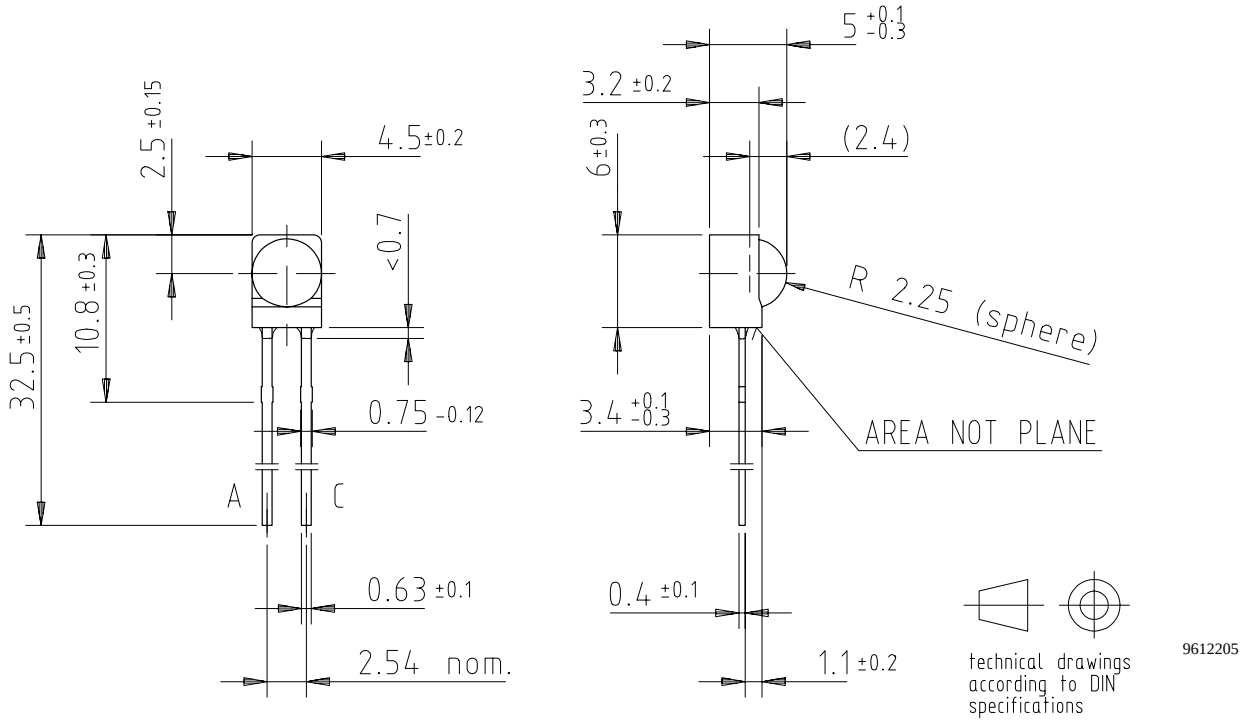

Ozone Depleting Substances Policy Statement

It is the policy of **Vishay Semiconductor GmbH** to

1. Meet all present and future national and international statutory requirements.

2. Regularly and continuously improve the performance of our products, processes, distribution and operating systems with respect to their impact on the health and safety of our employees and the public, as well as their

impact on the environment.

It is particular concern to control or eliminate releases of those substances into the atmosphere which are known as ozone depleting substances (ODSs).

The Montreal Protocol (1987) and its London Amendments (1990) intend to severely restrict the use of ODSs and forbid their use within the next ten years. Various national and international initiatives are pressing for an earlier ban on these substances.

Vishay Semiconductor GmbH has been able to use its policy of continuous improvements to eliminate the use of ODSs listed in the following documents.

1. Annex A, B and list of transitional substances of the Montreal Protocol and the London Amendments respectively

2. Class I and II ozone depleting substances in the Clean Air Act Amendments of 1990 by the Environmental Protection Agency (EPA) in the USA

3. Council Decision 88/540/EEC and 91/690/EEC Annex A, B and C (transitional substances) respectively.

Vishay Semiconductor GmbH can certify that our semiconductors are not manufactured with ozone depleting substances and do not contain such substances.

We reserve the right to make changes to improve technical design and may do so without further notice.
Parameters can vary in different applications. All operating parameters must be validated for each customer application by the customer. Should the buyer use Vishay-Semiconductors products for any unintended or unauthorized application, the buyer shall indemnify Vishay-Semiconductors against all claims, costs, damages, and expenses, arising out of, directly or indirectly, any claim of personal damage, injury or death associated with such unintended or unauthorized use.

Vishay Semiconductor GmbH, P.O.B. 3535, D-74025 Heilbronn, Germany
Telephone: 49 (0)7131 67 2831, Fax number: 49 (0)7131 67 2423