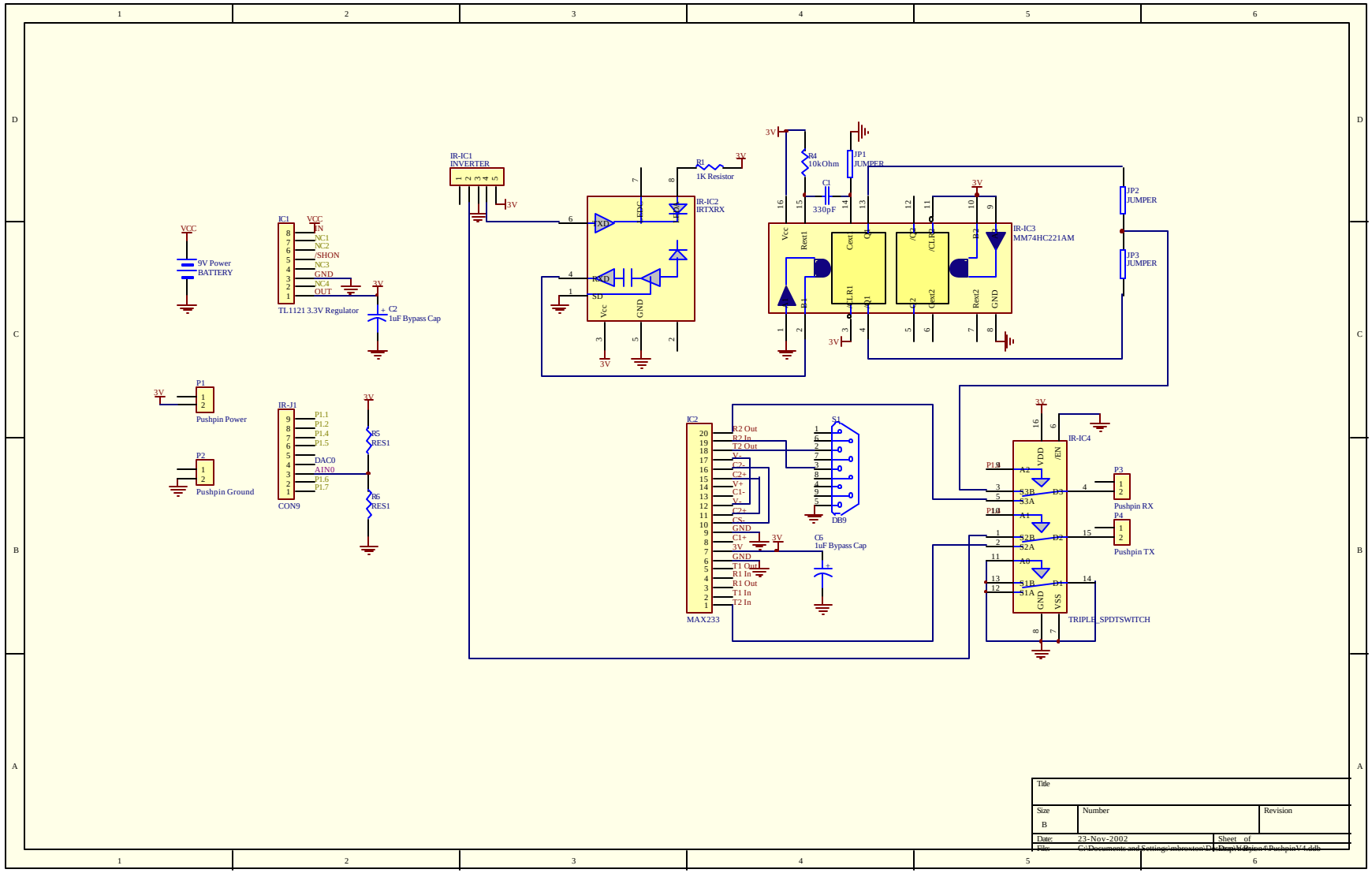

Title		
Size B	Number	Revision
Date: 23-Nov-2002	Sheet of	
File: C:\Documents and Settings\mbroxton\Desktop\Projects\Pushpin\V4.ddb		